HS DC-1625S 贵金属电刷

DC MOTOR Ø16 MM

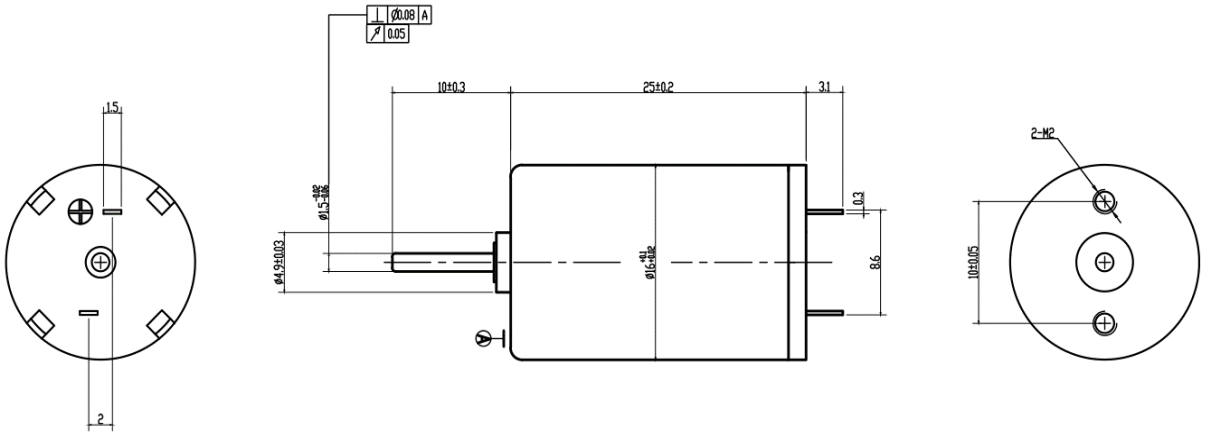

电机参数编号NO. OF MOTOR DATA				060078	120075	240074
额定电压下的电机参数 MOTOR DATA AT NOMINAL VOLTAGE						
1	额定电压	Nominal voltage	V	6	12	24
2	空载转速	No load speed	rpm	7890	7560	7470
3	空载电流	No load current	mA	14.70	6.90	3.40
4	额定转速	Nominal speed	rpm	4830	4390	4210
5	额定转矩/最大连续转矩	Nominal torque/max. continuous torque	g.cm	41.43	40.00	38.78
6	额定电流/最大连续电流	Nominal current/max. continuous current	A	0.58	0.27	0.13
7	堵转转矩	Stall torque	g.cm	107.14	96.33	89.29
8	堵转电流	Stall current	A	1.46	0.63	0.29
9	最大效率	Max. efficiency	%	81	80	80
电机常数 CHARACTERISTICS						
10	相间电阻	Terminal resistance	Ω	4.10	19.10	83.20
11	相间电感	Terminal inductance	Mh	0.14	0.61	2.49
12	转矩常数	Torque constant	g.cm/A	73.37	153.06	309.18
13	转速常数	Speed constant	rpm/V	1330	637	315
14	转速/转矩梯度	Speed/torque gradient	rpm/g.cm	7735	8255	8816
15	机械时间常数	Mechanical time constant	ms	8.87	8.92	9.00
16	转子转动惯量	Rotor inertia	gcm²	1.12	1.05	0.99

其他参数 OTHER SPECIFICATIONS				
17	电机磁极对数	Number of pole pairs		1
18	换向片数	Number of commutator segments		7
19	电机质量	Weight of motor	g	23.3

电机性能图MOTOR PERFORMANCE CHART

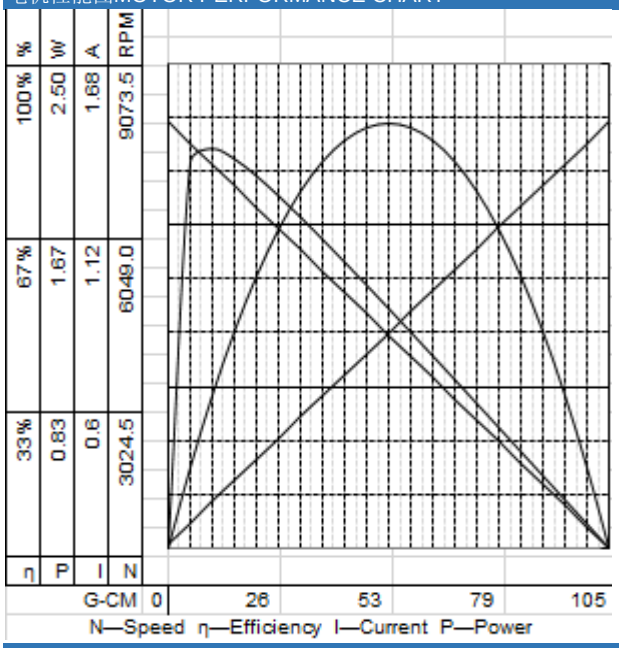

HS-1625-Q		
At No Load		
Speed	7890	RPM
Current	14.7	AMPS
At Rated Load	41.412	G-CM
Speed	4830	RPM
Current	577	AMPS
At Stall (extrapolated)		
Torque	10.50	G-CM
Current	1460	AMPS
At Rated Load		
Efficiency	81.69	%
Torque	10.71	G-CM
Speed	7101	RPM
Current	0.16	AMPS
Output	0.78	Watts
At maximum power output		
Output	2.17	Watts
Torque	53.55	G-CM
Speed	3945	RPM
Current	0.74	AMPS

备注：MARKS

技术参数如有变动，恕不另行通告
Technical parameters are subject to change without notice.
可根据客户具体要求对产品外观、技术参数进行调整
Adjusting the appearance and technical parameters under the requirements of customers
具体要求请联系本公司工程部。
Please contact with our engineers for details. details.

配置

前/后法兰：标准法兰/可配置法兰/无法兰Flange front/back: Standard flange/configurable flange/no flange
前/后轴：长度/直径/平面Shaft front/back: Length/diameter/flat face
电器连接：可连接端子或电缆/端口方向/电缆长度/插头类型Connection: Connecting terminals or cable